45133-11 ASSEMBLY INSTRUCTION (MT)

OCTOBER 06,2009

A		1pcs	∅5/16"
B		1pc	∅5/16"*1-3/4"
C		9pcs	∅5/16"
D		9pcs	∅5/16"
E		4pcs	∅5/16"*2-1/4"
F		2pcs	∅10*40MM
G		1pcs	∅5/16"*3-3/4"

step1

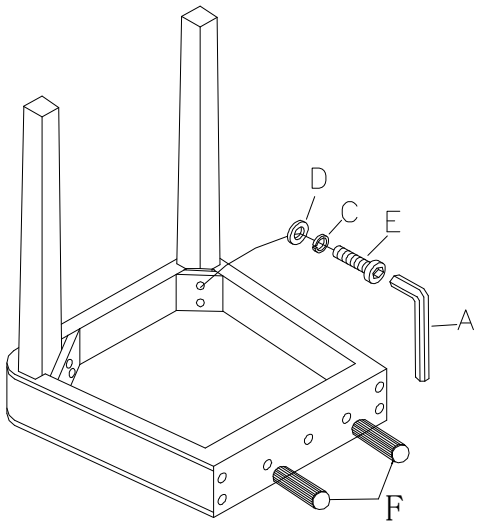

step2

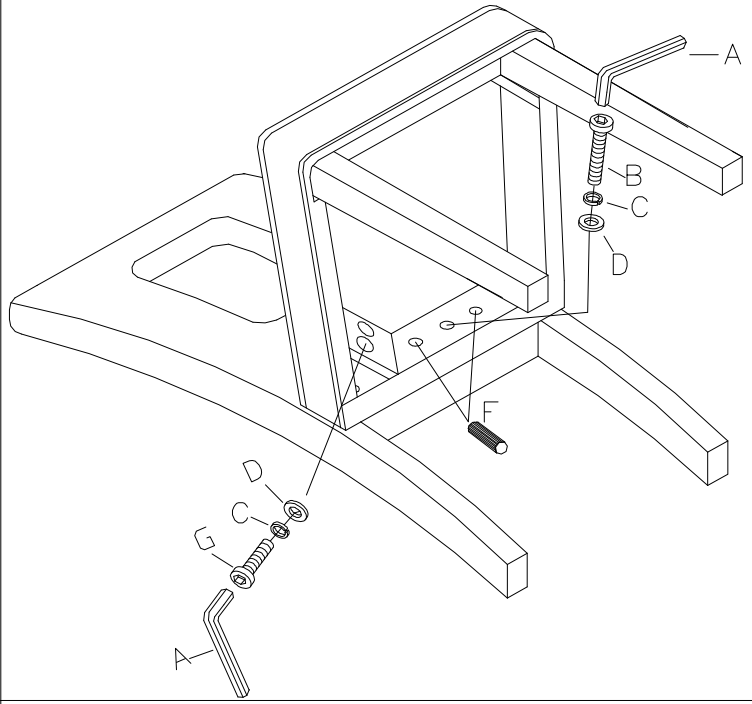
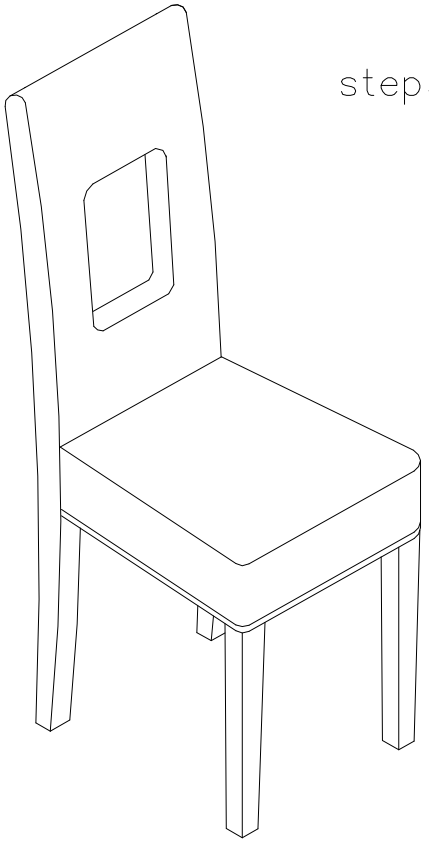
step3